REV.	ECN/PCN/DESCRIPTION	BY	DATE

AS INSTALLED

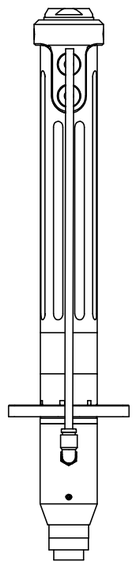

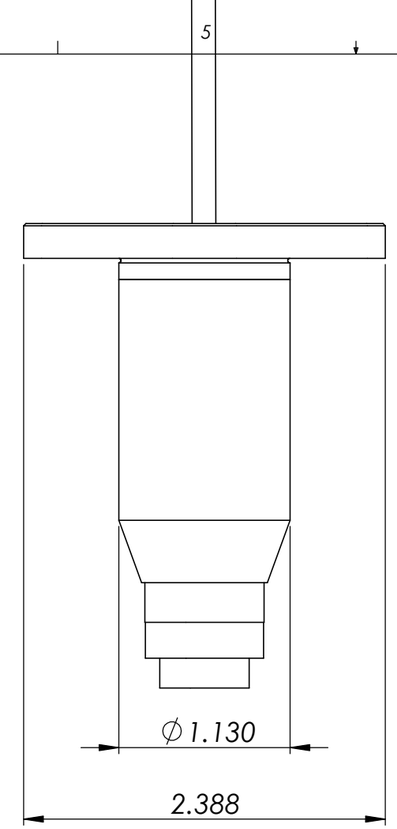

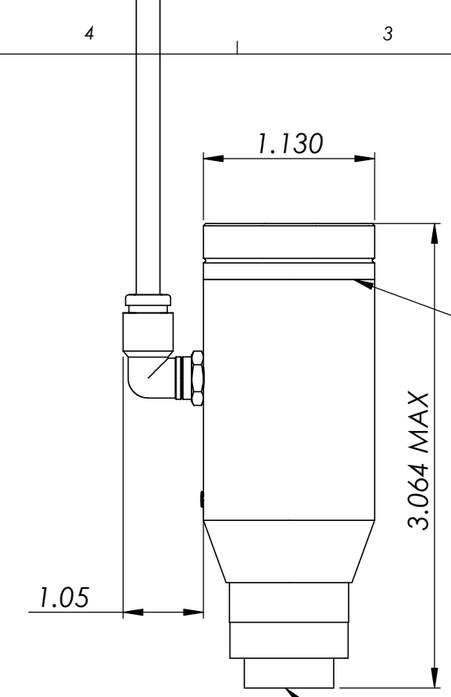

THREADED SEPARATION POINT

M10 THREAD FOR ASG SCREW FINDERS (SOLD SEPARATELY)

10 FEET OF TUBING SUPPLIED

#4-40 SET SCREW

ORIENTATION OF FITTING TO MOUNTING FLANGE SUBJECT TO CHANGE

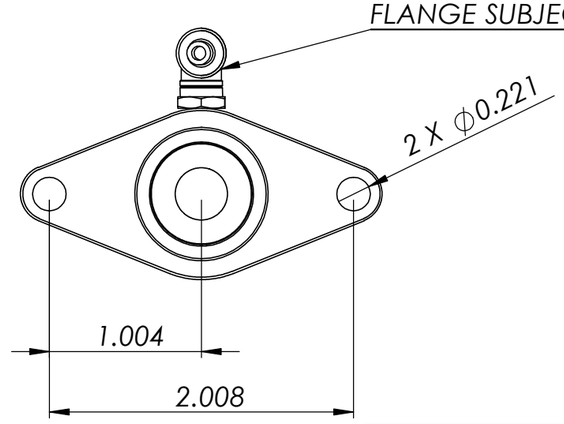

INTENDED FOR USE WITH ASG-SD2500-FX MODEL SCREWDRIVERS

PROPRIETARY AND CONFIDENTIAL

THE INFORMATION CONTAINED IN THIS DRAWING IS THE SOLE PROPERTY OF ASG A DIVISION OF JERGENS INC. ANY REPRODUCTION IN PART OR AS A WHOLE WITHOUT THE WRITTEN PERMISSION OF ASG A DIVISION OF JERGENS INC. IS PROHIBITED.

NEXT ASSY	USED ON
APPLICATION	

UNLESS OTHERWISE SPECIFIED:

DIMENSIONS ARE IN INCHES

TWO PLACE DECIMAL ±0.01
THREE PLACE DECIMAL ±0.005

FRACTIONAL ±1/64
ANGULAR: ± 1/2 DEG
FINISHES 125 MAX

REMOVE ALL BURRS AND BREAK SHARP EDGES 0.005/0.010

MATERIAL

FINISH

DO NOT SCALE DRAWING

	NAME	DATE
DRAWN		
CHECKED		
ENG APPR.		
MFG APPR.		
Q.A.		

COMMENTS:

TITLE: ASG-AC2500-VPM

ASG PRECISION FASTENING

SIZE	DWG. NO.	REV
B	ASG-AC2500-VPM	A
	WEIGHT:	SHEET 1 OF 1